Contents

F-5-1a Concrete Bollards
F-5-1b Concrete Bollards
F-5-2 Concrete Bollards with City Logo
F-5-3 Cast Iron Bollards
F-5-4 Decorative Steel Bollard
F-5-5 Swivel "P" Gate Steel Bollard
F-5-6 Steel Bollard
F-5-7 Steel Railing
F-5-8 Stainless Steel Railing
F-5-9 Decorative Aluminum Railing/Splash Guard
F-5-10 Decorative Steel Railing
F-5-11 Decorative Metal Fence
F-5-12 Concrete Vehicle Deflector (TTC/LRT Platforms)

Bollards	
Finishes	Plain or Coloured Concrete
	Exposed Aggregate
	Light or Medium Sandblast
	Acid Etched
Supplier	Streetscape Architectural Precast Products (or equivalent)

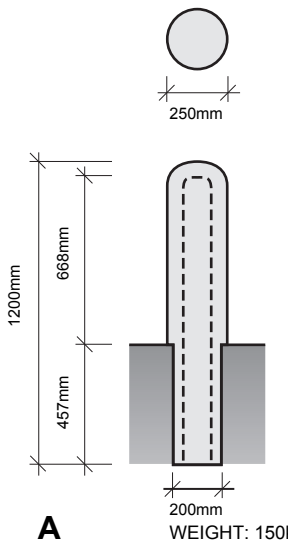

A WEIGHT: 150kg

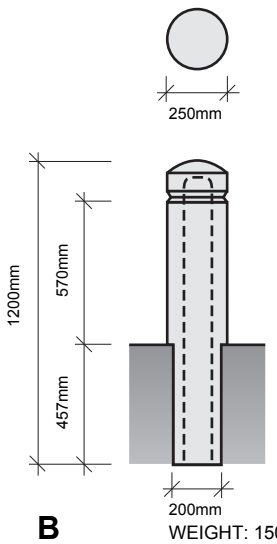

B WEIGHT: 150kg

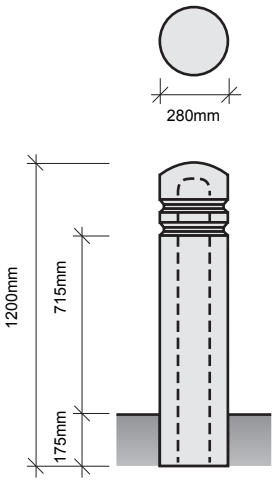

C WEIGHT: 166kg

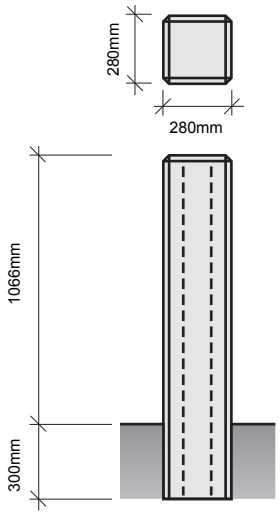

D WEIGHT: 212kg

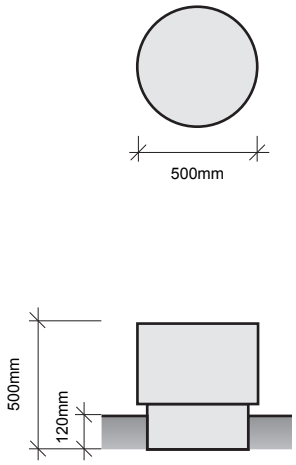

E WEIGHT: 227kg

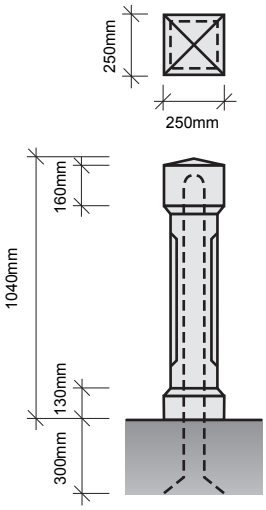

F WEIGHT: 113kg

Bollards (continued)	
Finishes	Plain or Coloured Concrete
	Exposed Aggregate
	Light or Medium Sandblast
	Acid Etched
Supplier	Streetscape Architectural Precast Products (or equivalent)

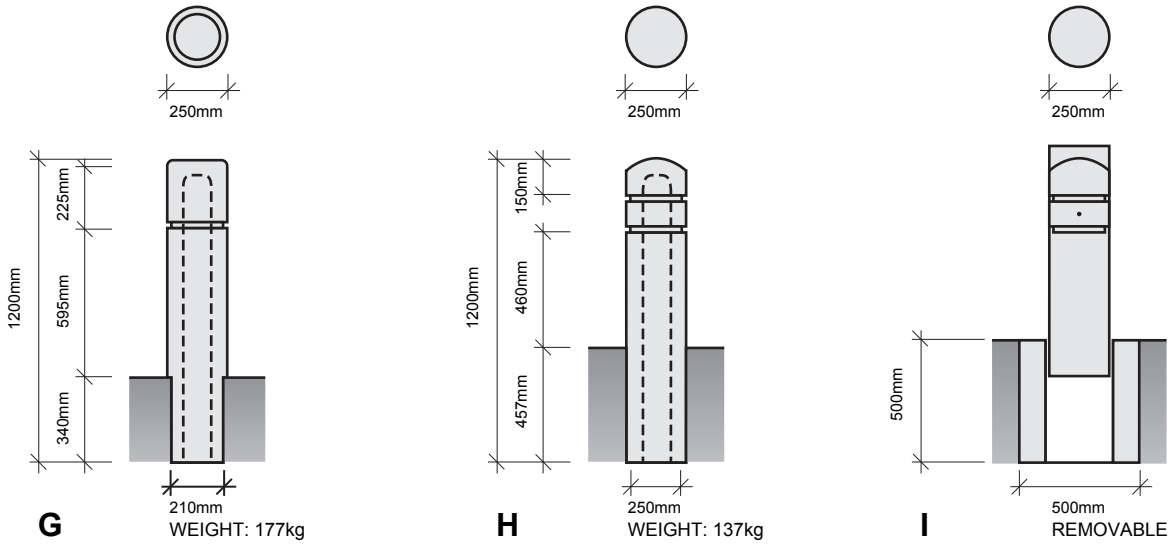

Pyramid Bollard	
Finishes	Plain Concrete
Supplier	Streetscape Architectural Precast Products

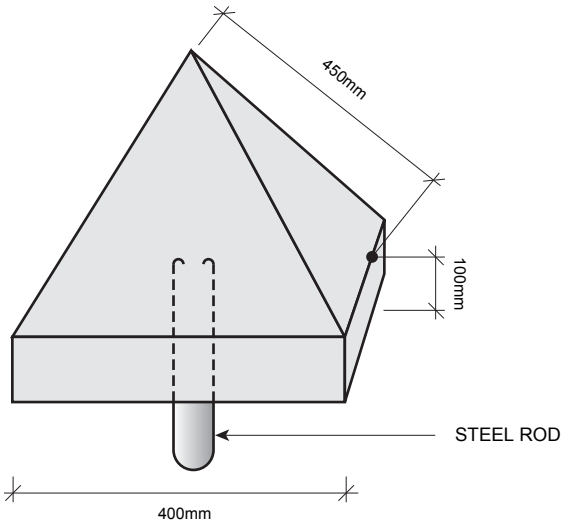

Precast Concrete Bollard with City of Toronto Logo	
Finishes	Aggregate and Terrazzo
Colour	Ottawa Red

Precast Concrete Bollard with City of Toronto Logo	
Finishes	Plain or Coloured Concrete

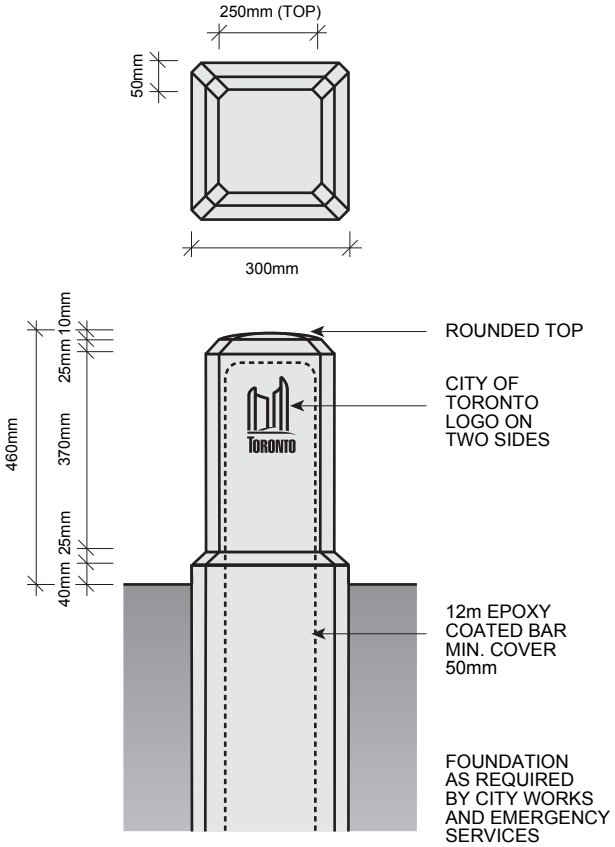

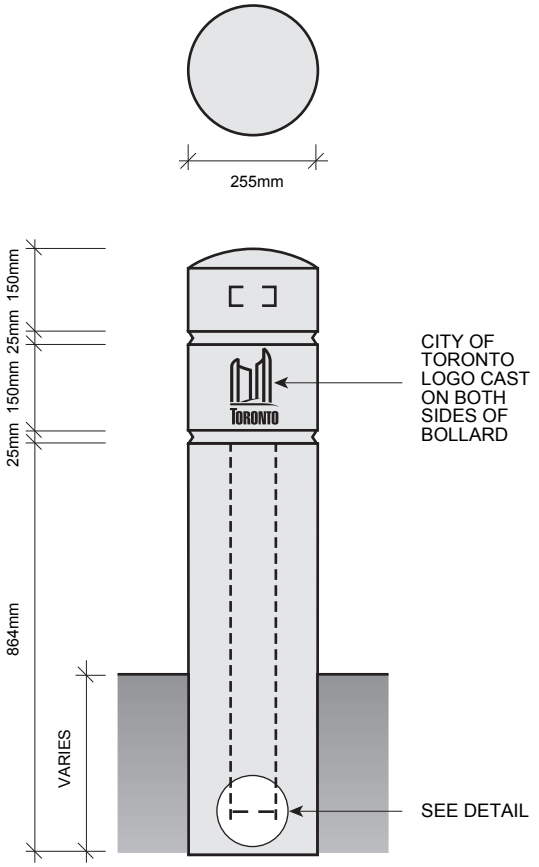

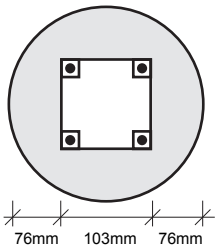

DETAIL
4,10mm x 900mm REINFORCING BARS TIED AT THE TOP AND BOTTOM. 45 MPA CONCRETE

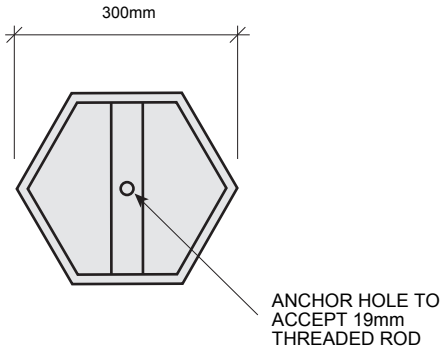

PLAN

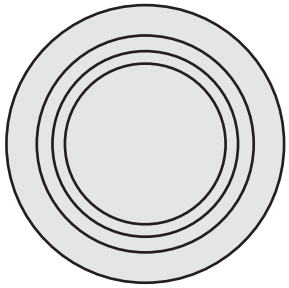

PLAN

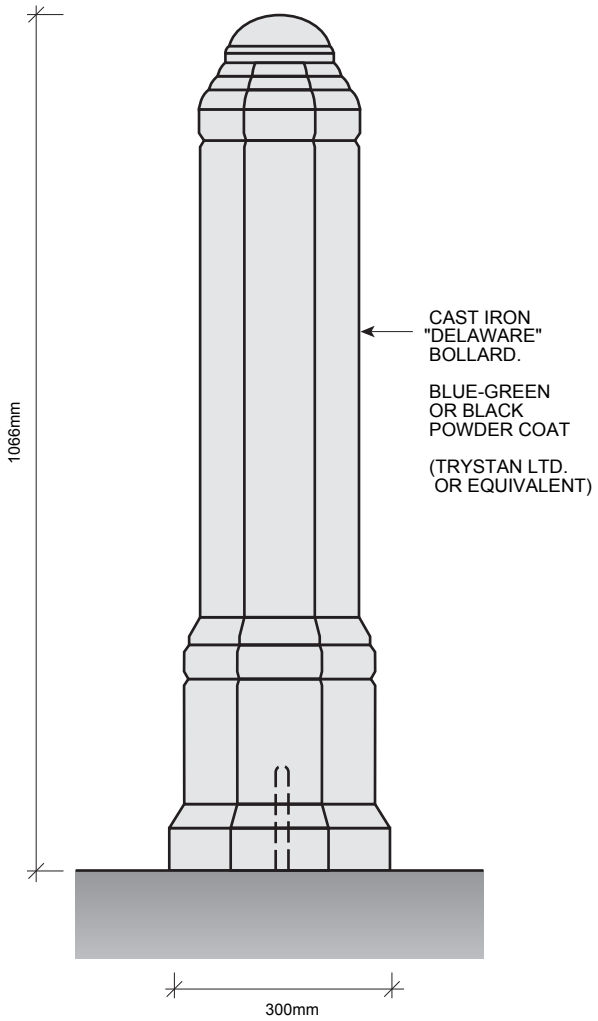

ELEVATION

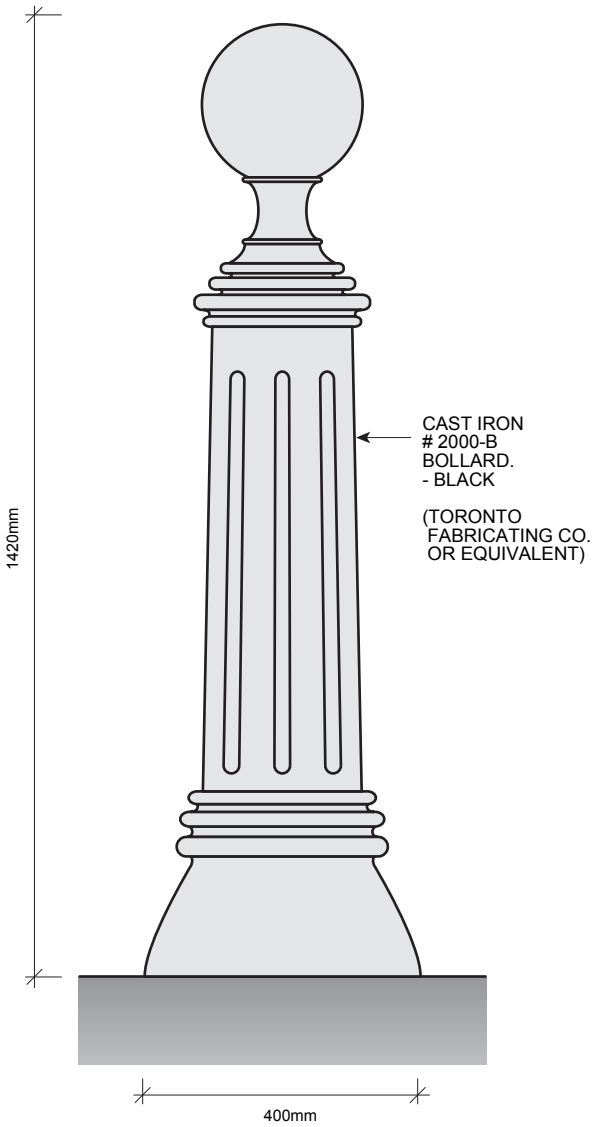

ELEVATION

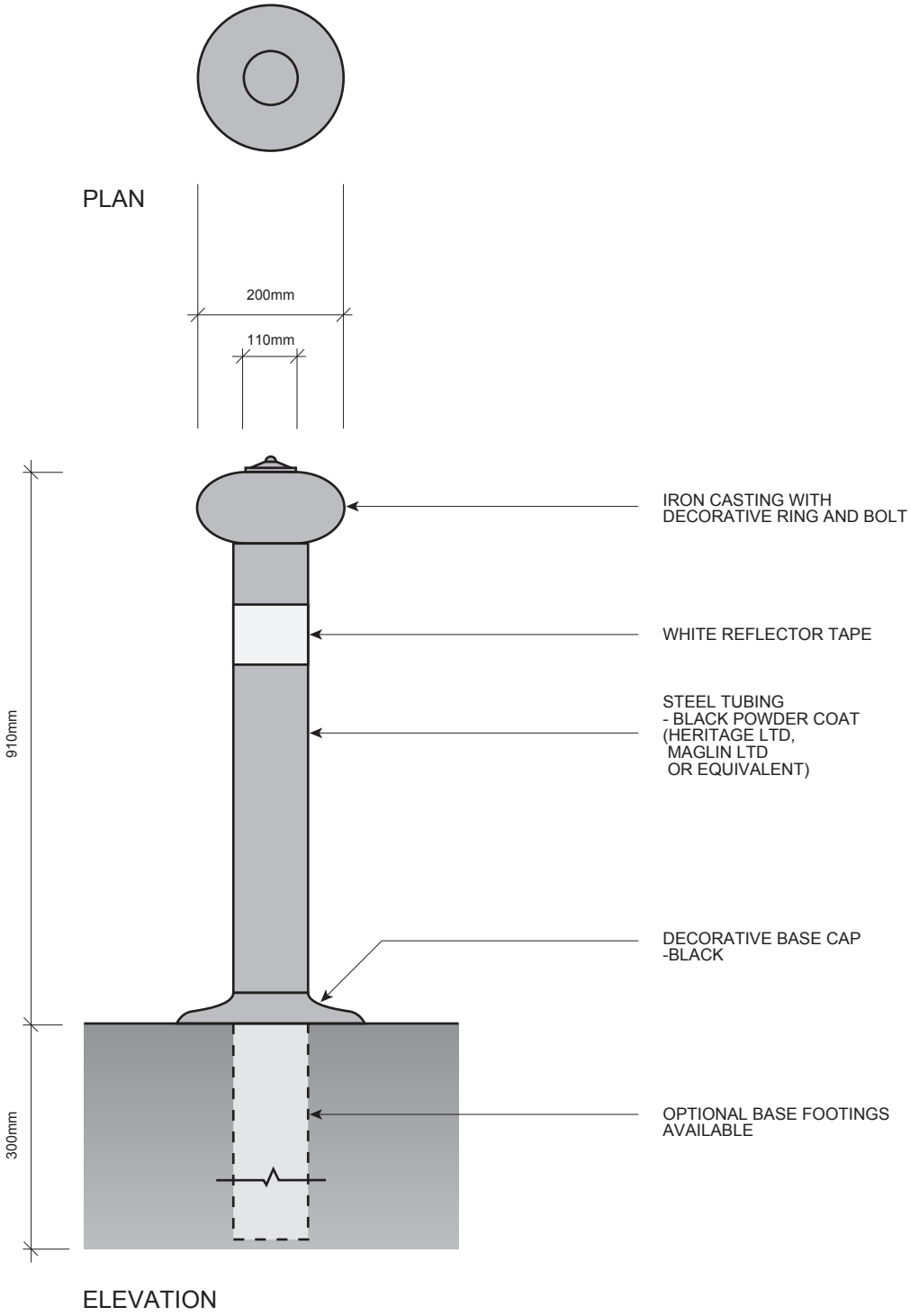
PLAN
200mm
110mm
910mm
300mm
IRON CASTING WITH
DECORATIVE RING AND BOLT
WHITE REFLECTOR TAPE
STEEL TUBING
- BLACK POWDER COAT
(HERITAGE LTD,
MAGLIN LTD
OR EQUIVALENT)
DECORATIVE BASE CAP
-BLACK
OPTIONAL BASE FOOTINGS
AVAILABLE
ELEVATION

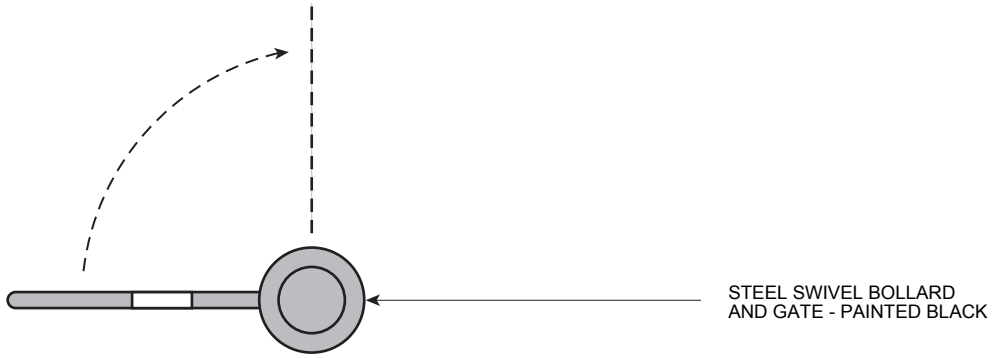

PLAN

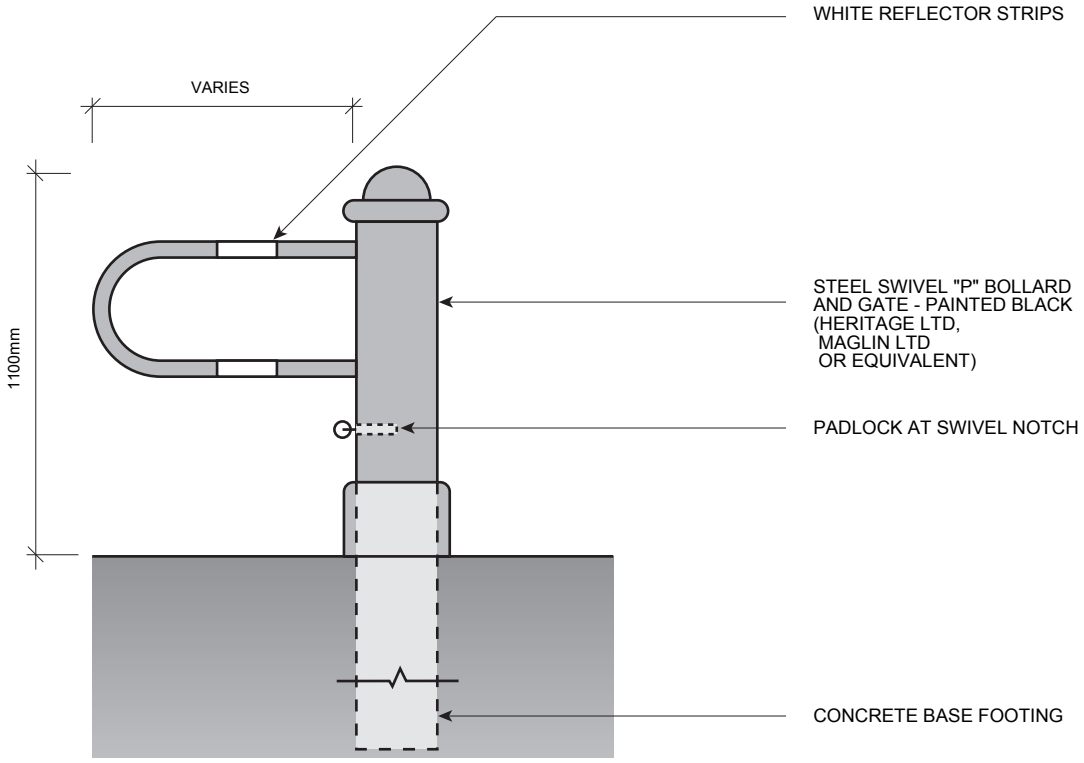

ELEVATION

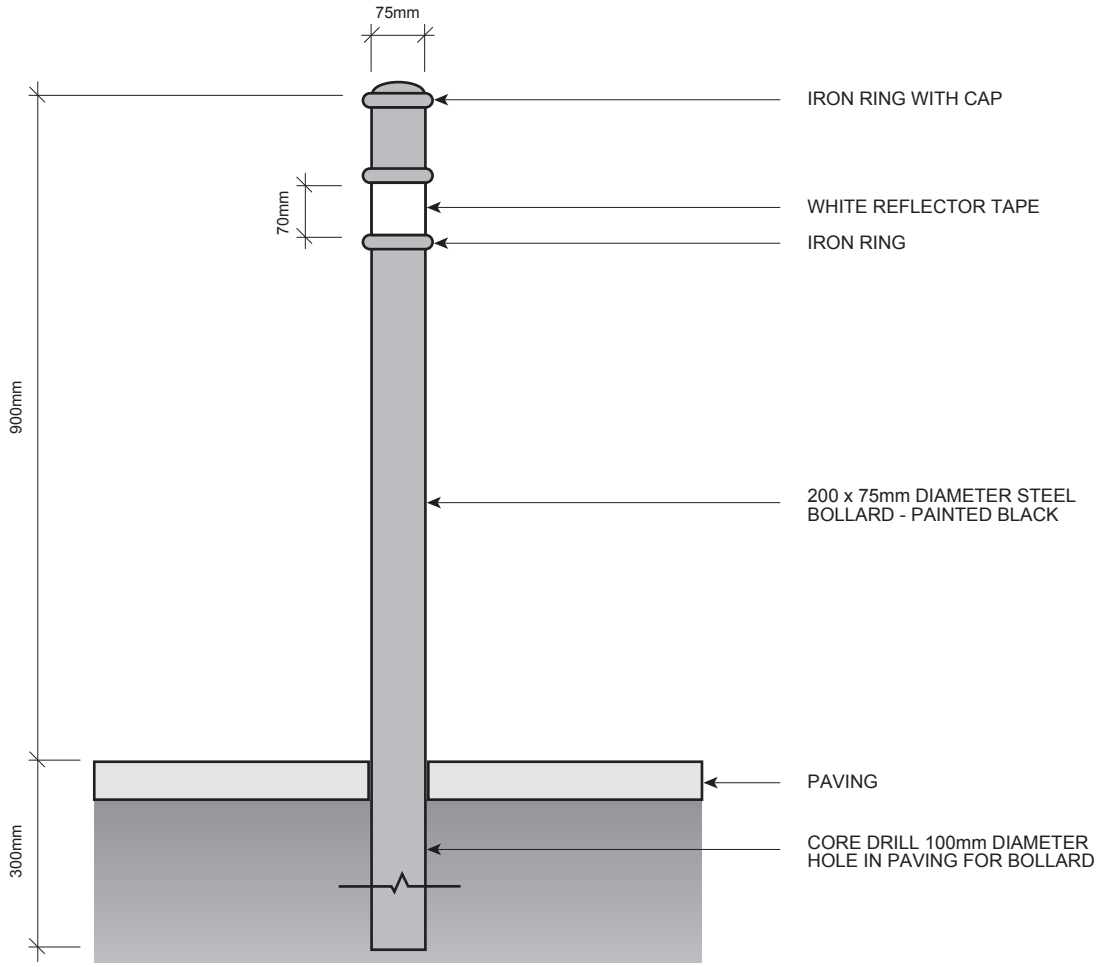

NOTES:
1. AVAILABLE FROM CITY OF TORONTO, TRANSPORTATION SERVICES.

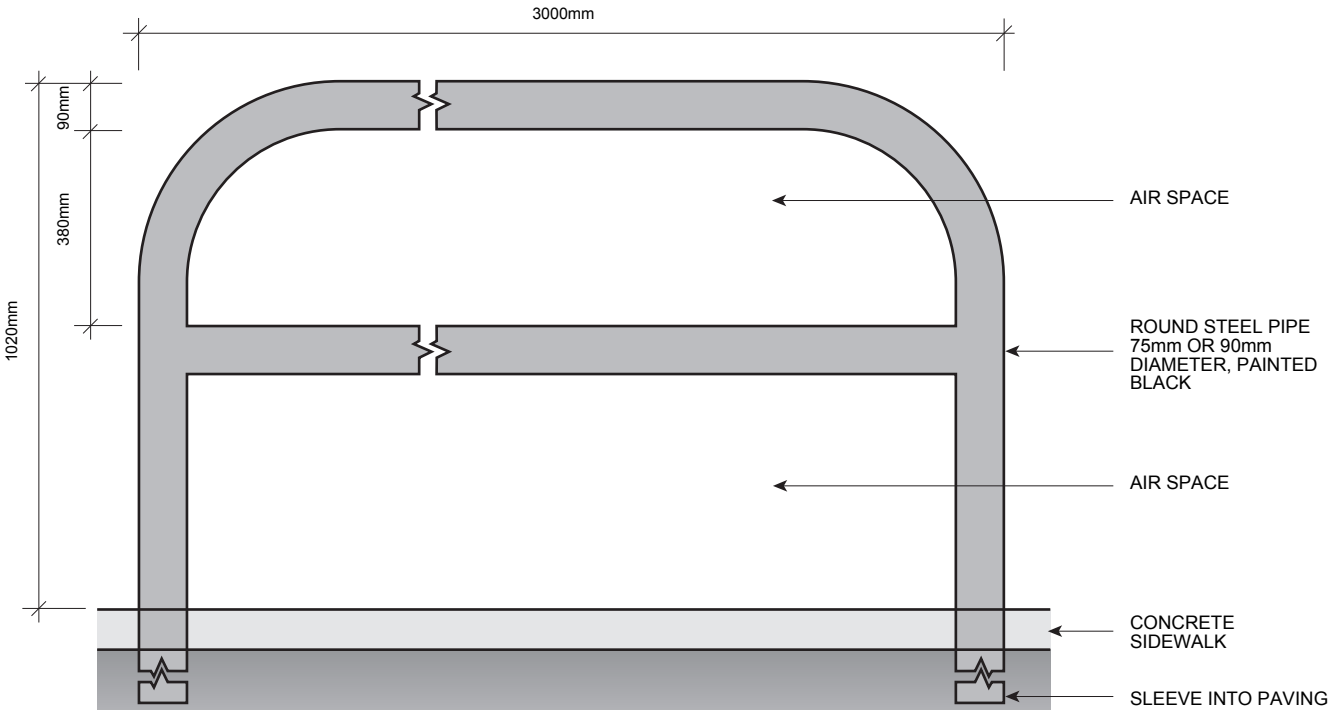
3000mm
90mm
380mm
1020mm
AIR SPACE
ROUND STEEL PIPE
75mm OR 90mm
DIAMETER, PAINTED
BLACK
AIR SPACE
CONCRETE
SIDEWALK
SLEEVE INTO PAVING

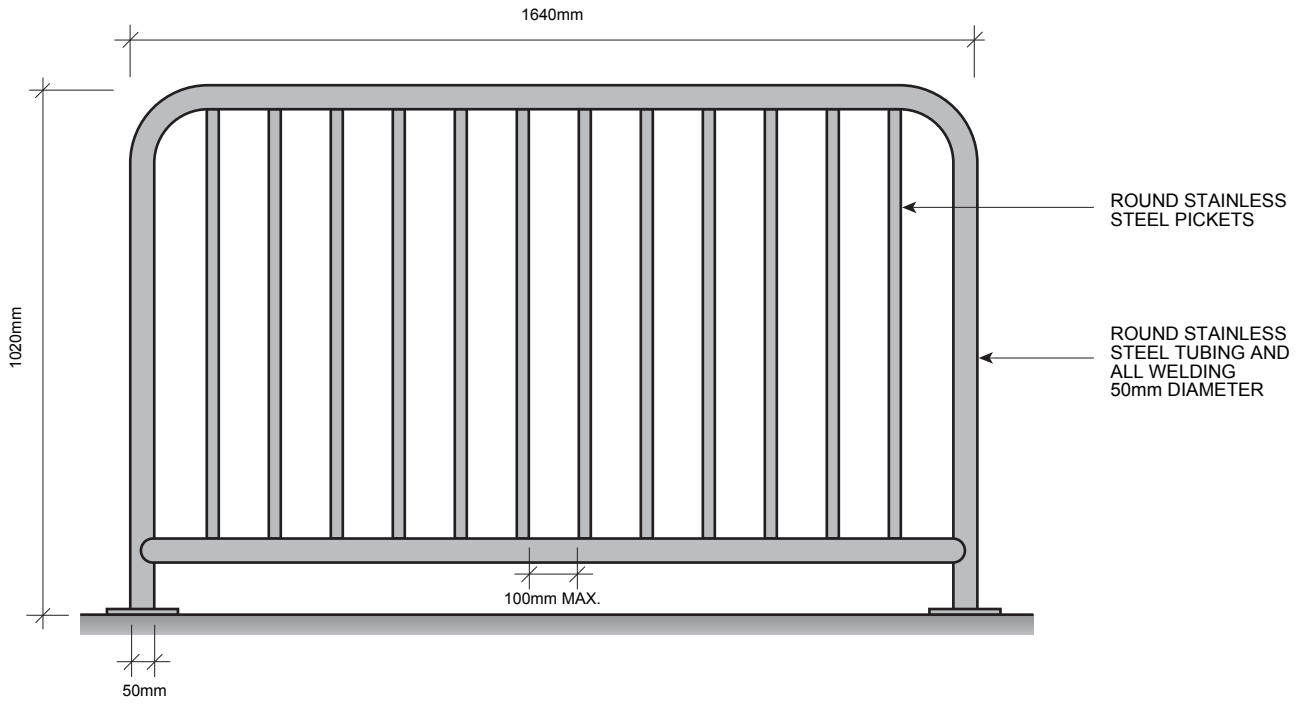
1640mm
1020mm
ROUND STAINLESS STEEL PICKETS
ROUND STAINLESS STEEL TUBING AND ALL WELDING 50mm DIAMETER
100mm MAX.
50mm

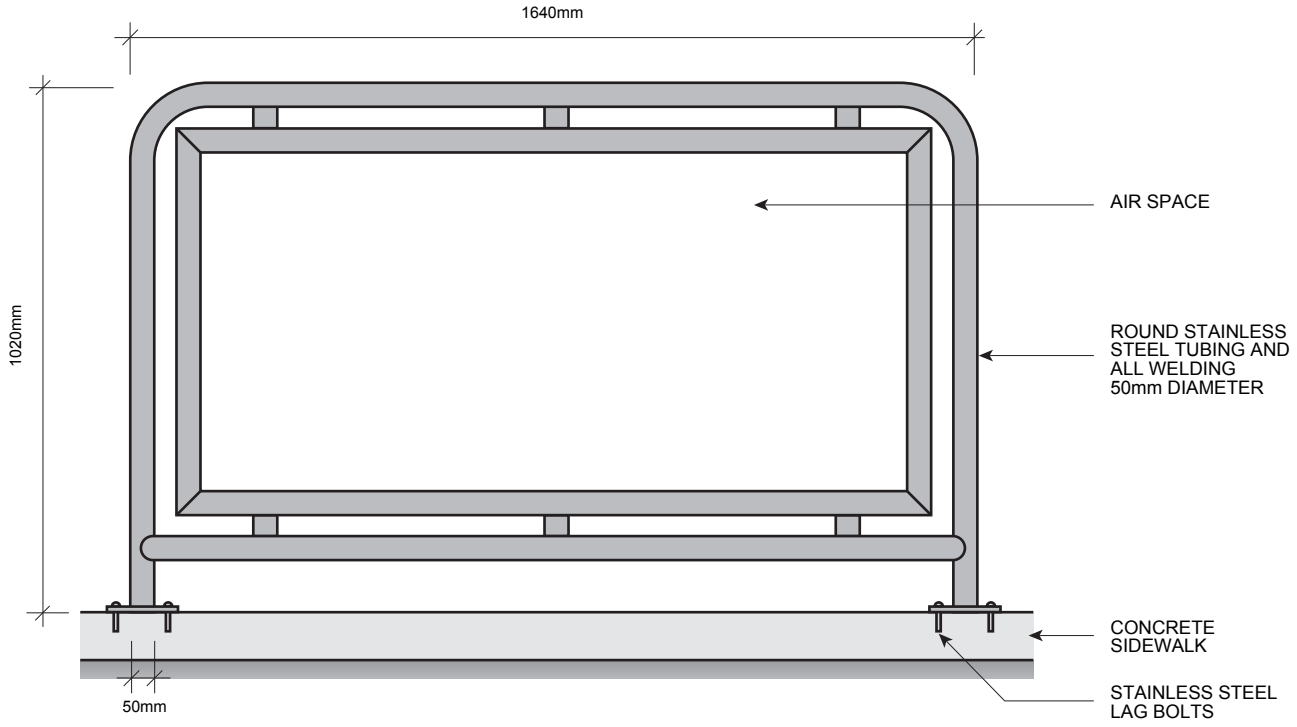
1640mm
1020mm
AIR SPACE
ROUND STAINLESS STEEL TUBING AND ALL WELDING 50mm DIAMETER
CONCRETE SIDEWALK
STAINLESS STEEL LAG BOLTS
50mm

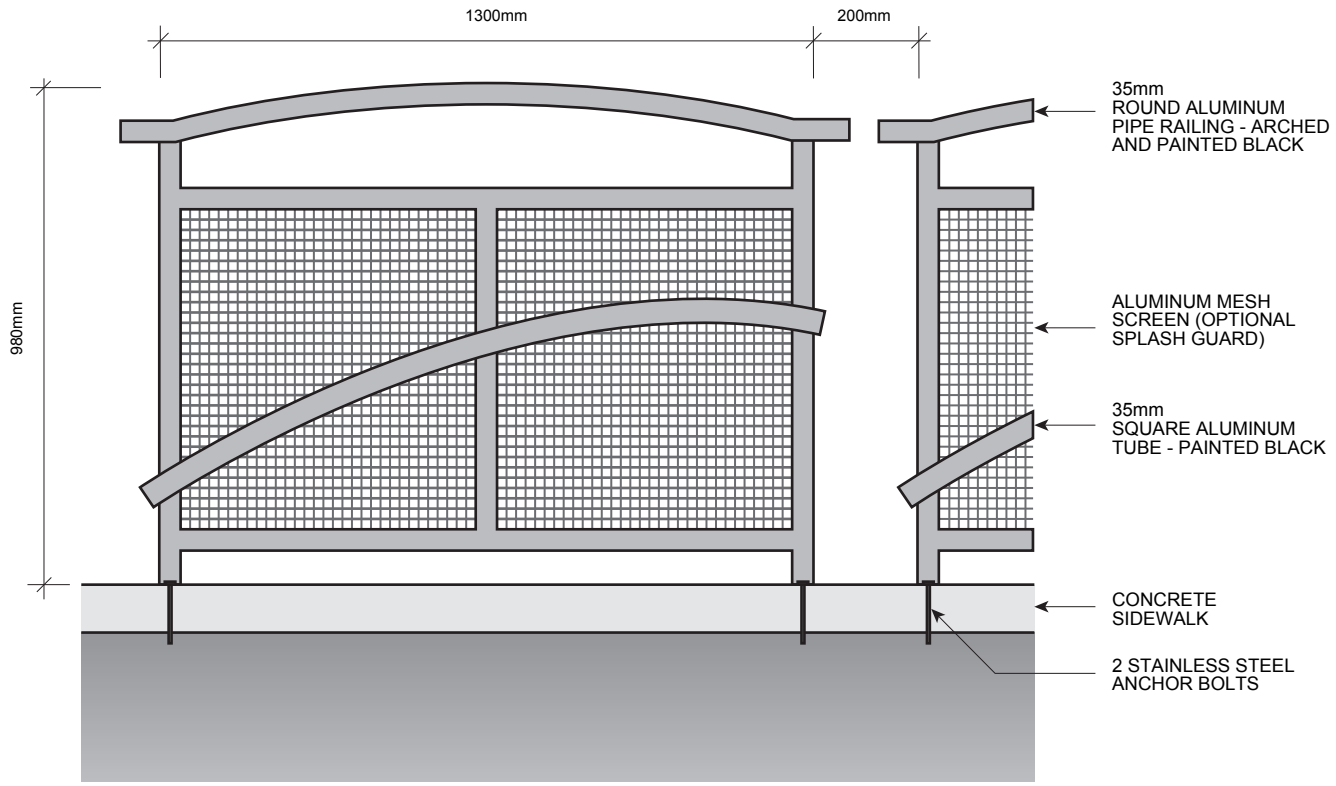

ELEVATION - STREET SIDE

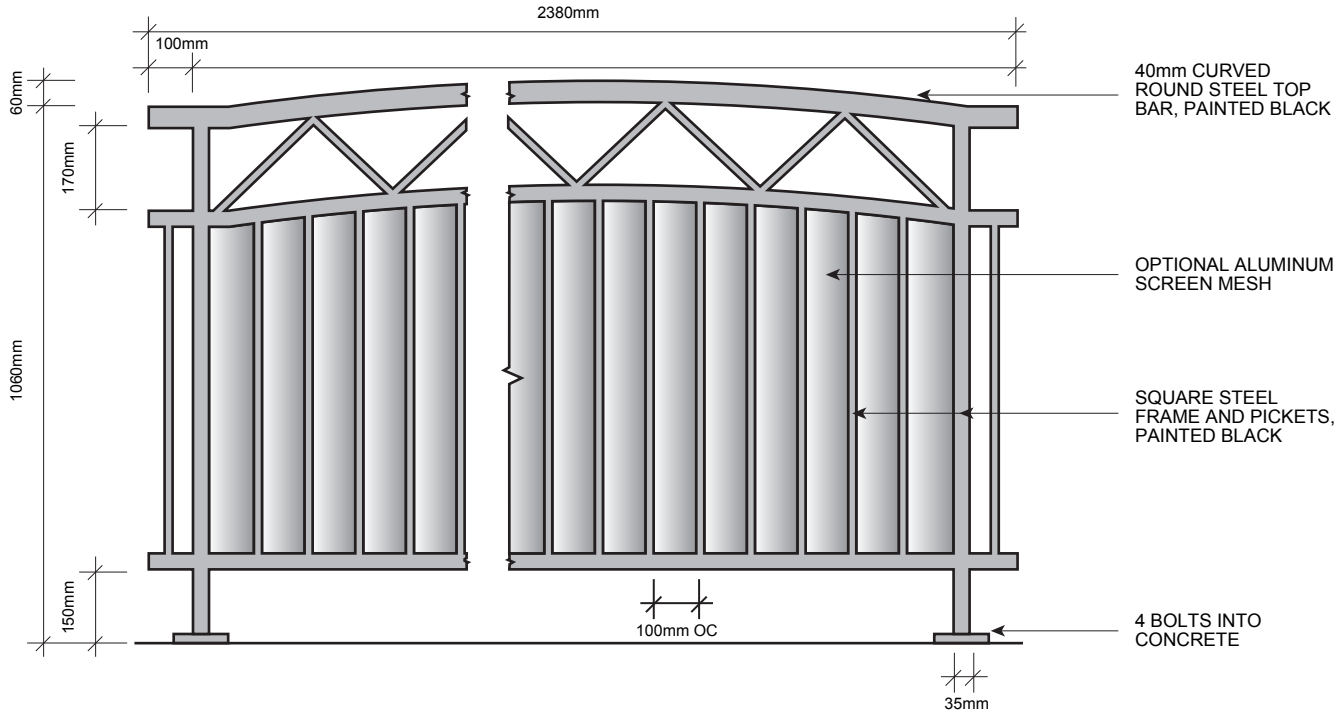
2380mm
100mm
60mm
170mm
1060mm
150mm
100mm OC
35mm
40mm CURVED ROUND STEEL TOP BAR, PAINTED BLACK
OPTIONAL ALUMINUM SCREEN MESH
SQUARE STEEL FRAME AND PICKETS, PAINTED BLACK
4 BOLTS INTO CONCRETE

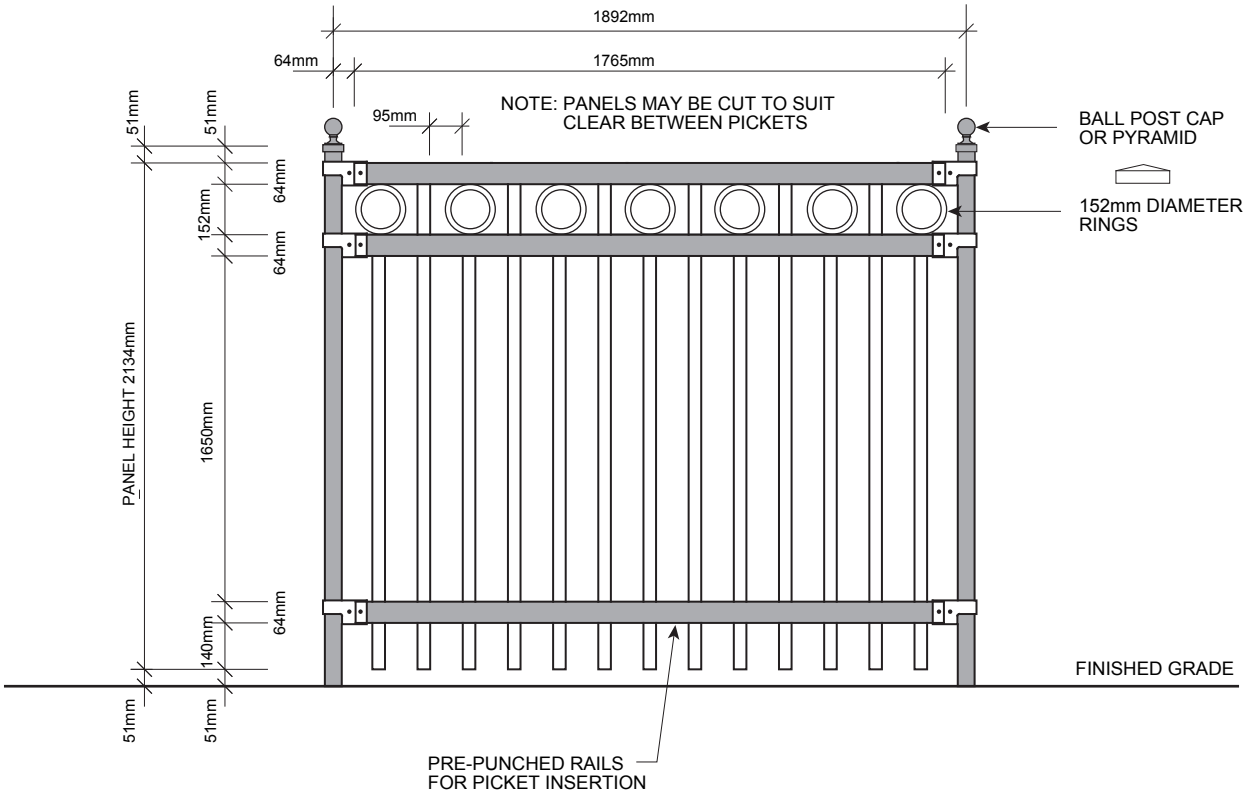
1892mm
64mm
1765mm
95mm
NOTE: PANELS MAY BE CUT TO SUIT
CLEAR BETWEEN PICKETS
BALL POST CAP
OR PYRAMID
152mm DIAMETER
RINGS
51mm
51mm
64mm
152mm
64mm
PANEL HEIGHT 2134mm
1650mm
64mm
140mm
51mm
51mm
FINISHED GRADE
PRE-PUNCHED RAILS
FOR PICKET INSERTION

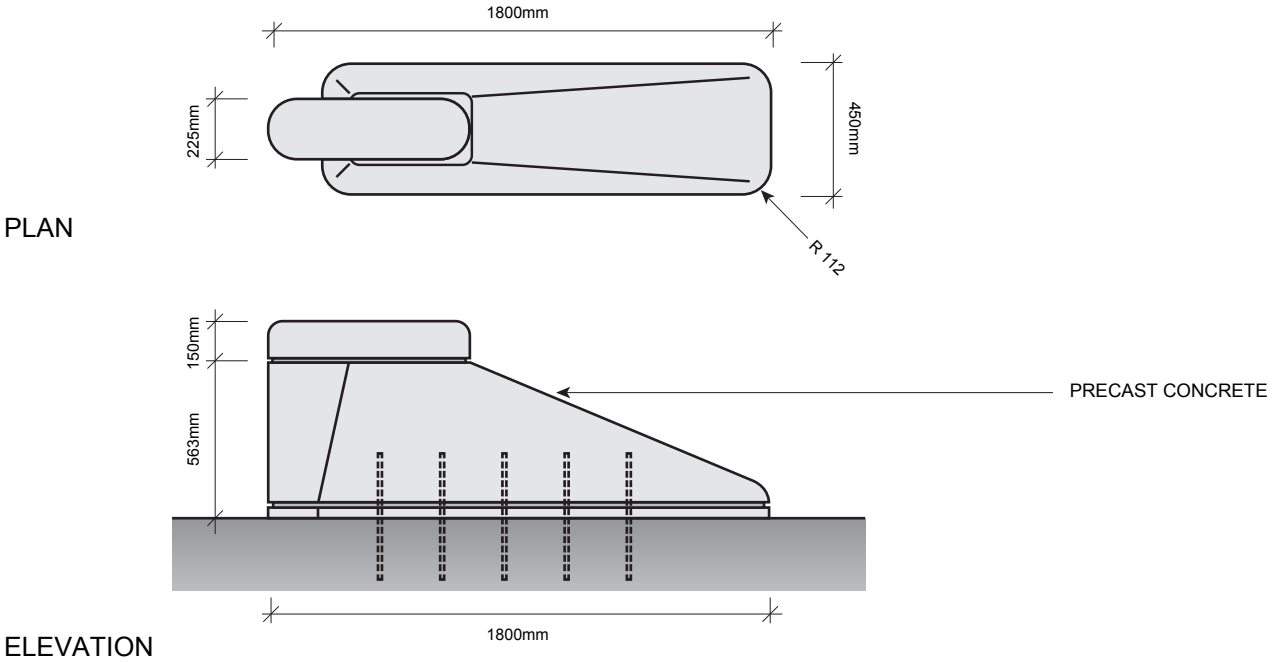
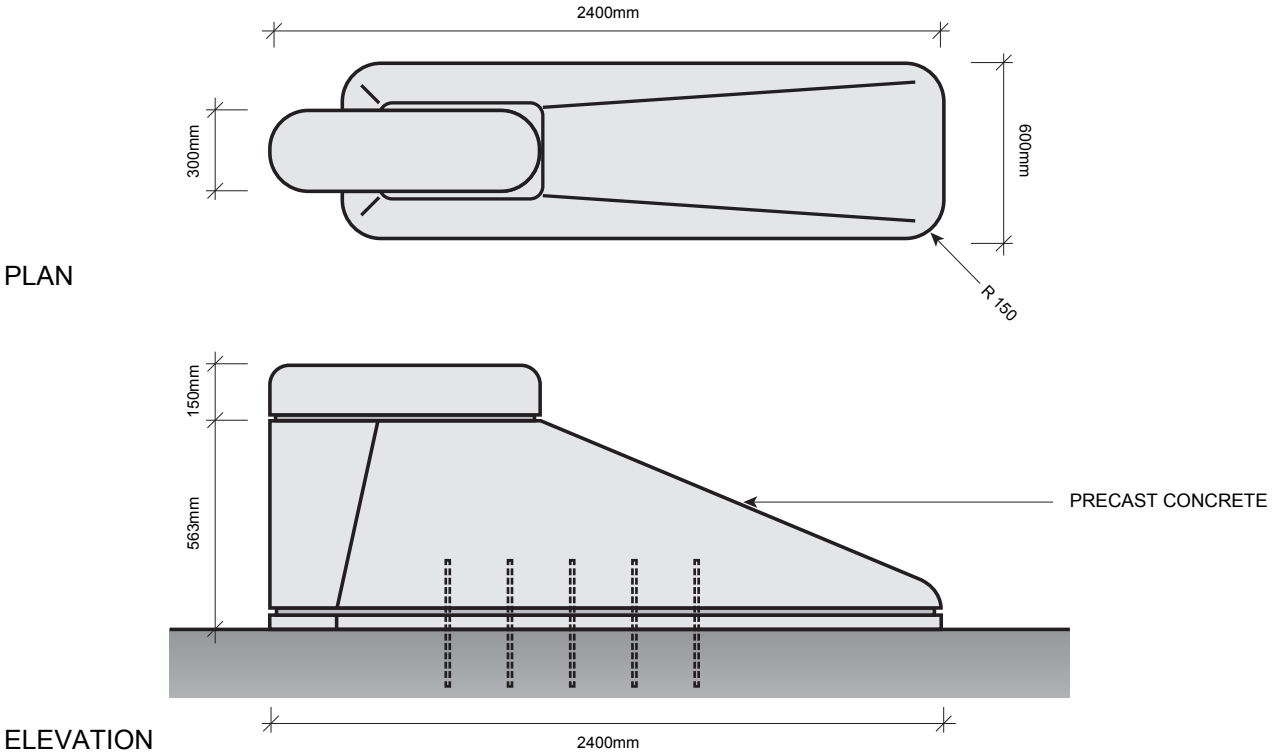
MANUFACTURER:
STREETSCAPE PRECAST
INDUSTRIES (OR EQUIVALENT)